SWEDESE



Lamino

Design Yngve Ekström

Content

Lamino

23001 Easy chair....3
23010 Foot stool....4
23026 Table....5

Lamini

23301 Kids Easy chair....6
23310 Kids Foot stool....7

Lamino Easy chair

Design Yngve Ekström

The Lamino table is a slender and versatile side table, with a distinctive leg frame that echoes the soft forms of the iconic easy chair. The tabletop is made of solid wood, while the legs are molded at the factory in Småland. The table is available in several wood species and finishes to match the rest of the Lamino family.



Product Details

Article number	23001
Description	Easy chair in molded and laminated veneer.
Year of launch	1956
Country of origin	Sweden
Warranty	5 years
Assmelbled	No
Certification	Möbelfakta

Standard options

Upholstery

Sheep skin;
Off white, Black, Moonlight, Charcoal, Espresso, Sahara

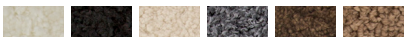

Saddle leather;
9666 Brown red, 9101 Nature, 9110 Black



Fabric

Leather

Wooden base

Oak; Natural lacquer, White pigmented lacquer, Oil



Walnut; Natural lacquer



Beech; Natural lacquer, Black lazur finish,
White lazur finish, Walnut stained



Add ons

Fabric-Upholstered Back

Gotland Sheepskin

Legs +3 cm in Height

Back Legs +3 cm in Height

Technical Information

Materials and construction

Leg stand / Lamino easy chair features two leg stands constructed from molded and laminated veneer. Each leg stand consists of three components; leg, support angle, armrest plate, wich are seamlessly joined. Leg dimensions: 30x28 mm. The leg stands are attached to the seat with two screws each.

Seat / Consists of an outer and inner frame made of laminated and molded veneer. Solid wood cross braces provide stability and facilitate attachment of the leg assemblies. For enhanced comfort, the front edge of the seat and the upper edge of the backrest are fitted with bonded foam beneath the upholstery.

Sheepskin Upholstery / The Lamino easy chair with sheepskin upholstery features a load-bearing linen fabric stretched over the inner frame. The sheepskin is bonded to the fabric and stapled to the frame. Finally, an outer frame is secured with screws on both sides of the inner frame, enclosing and securing the sheepskin.

Fabric and Leather Upholstery / The frame is fitted with a load-bearing linen fabric. Polyether foam padding is applied to the seat and backrest. The fabric or leather upholstery is stapled to the frame. The upholstery is finished with piping. A fabric- or leather-upholstered back panel is available as an optional feature.

Saddle Leather Upholstery / Saddle leather is inherently load-bearing and is stretched and stapled over the frame. The upholstery is finished with piping.

Fabric req.	1,3 lpm
Leather req.	30 ft²
Weight	approx. 11 kg

Maintenance
All components are replaceable
Covered by the Swedese Repair refurbishment service
Care instructions available on Swedese´s website

Downloads
2D and 3D files available for download from the product page on Swedese´s website.

Dimensions (cm)
All dimensions are approximate and subject to minor variations.

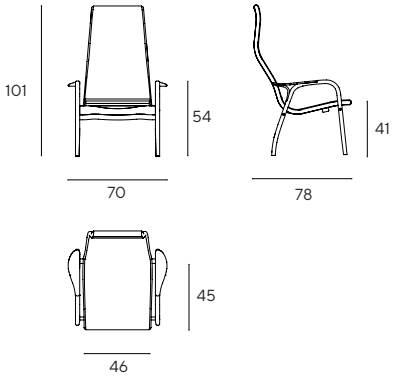

Lamino Foot stool

Design Yngve Ekström

Lamino is more than an easy chair. It is Yngve Ekström's life's work and the result of a constant pursuit of simplicity and the perfect curve. The footstool's sweeping lines beautifully complement the chair's iconic shape. The Lamino easy chair and footstool have been crafted from molded, laminated veneer in the same Swedese factory in Småland, Sweden, since 1956. The Lamino footstool is available upholstered in sheepskin, fabric, or leather, with a choice of wood types and finishes.



Product Details

Article number	23010
Description	Foot stool in molded and laminated veneer.
Year of launch	1956
Country of origin	Sweden
Warranty	5 years
Assembled	No
Certification	No

Standard options

Upholstery

Sheepskin; Off white, Black, Moonlight, Charcoal, Espresso, Sahara



Saddle leather; 9666 Brown red, 9101 Nature, 9110 Black



Fabric

Leather

Wooden base

Oak; Natural lacquer, White pigmented lacquer, Oil



Walnut; Natural lacquer



Beech; Natural lacquer, Black lazur finish, White lazur finish, Walnut stained



Add ons

Gotland Sheepskin

Legs +3 cm in Height

Technical Information

Materials and construction

Leg stand / Lamino stool features two leg stands constructed from molded and laminated veneer. The leg stands are attached to the seat with two screws each.

Seat / Seat shell in molded plywood. Polyether foam is glued to the seat shell. Solid wood cross braces are mounted underneath the seat.

Sheepskin Upholstery / Sheepskin is glued to the polyether foam and stapled in place.

Fabric, Leather and Saddle Leather Upholstery /
Upholstery is stretched over the frame and stapled in place. Finished with welt cord.

Fabric req.	0,8 lpm
Leather req.	19 ft ²
Weight	approx. 4 kg

Maintenance
All components are replaceable
Covered by the Swedese Repair refurbishment service
Care instructions available on Swedese´s website

Downloads
2D and 3D files available for download from the product page on Swedese´s website.

Dimensions (cm)
All dimensions are approximate and subject to minor variations.

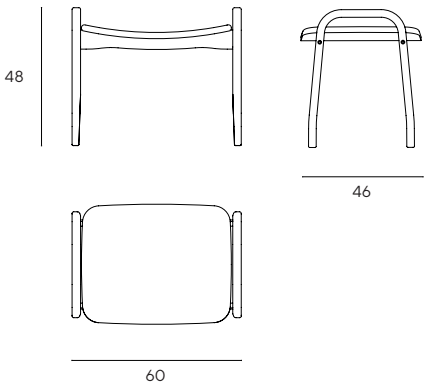

Lamino Table

Design Yngve Ekström

The Lamino table is a slender and versatile side table, with a distinctive leg frame that echoes the soft forms of the iconic easy chair. The tabletop is made of solid wood, while the legs are molded at the factory in Småland. The table is available in several wood species and finishes to match the rest of the Lamino family.



Product Details

Article number	23026
Description	Side table with legs made from molded laminated veneer. Table top in massive wood.
Year of launch	2015
Country of origin	Sweden
Warranty	5 years
Assembled	Yes
Certification	No

Standard options

Surface treatment

Oak; Natural lacquer, White pigmented lacquer, Oil



Walnut; Natural lacquer



Beech; Natural lacquer, Black lazur finish, White lazur finish, Walnut stained



Technical Information

Materials and construction

Base / Three legs made of molded and laminated veneer, glued together. Leg dimensions: 29x16 mm. The base is attached to the underside of the tabletop with screws.

Tabletop / Round tabletop in solid wood, 19 mm thick. The edge is beveled all around, with a 6 mm high outer edge.

Weight approx. 3 kg

Maintenance
All components are replaceable
Covered by the Swedese Repair refurbishment service
Care instructions available on Swedese´s website

Downloads
2D and 3D files available for download from the product page on Swedese´s website.

Dimensions (cm)
All dimensions are approximate and subject to minor variations.

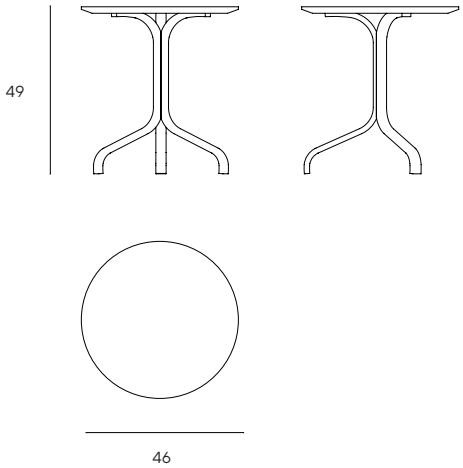

Lamini Kids Easy chair

Design Yngve Ekström

Lamini is the children's version of Swedese's design classic Lamino. Just like Lamino, Lamini is made from molded, laminated veneer. It is handcrafted with great skill in our factories in Småland, Sweden. The result is a high-quality easy chair for our youngest customers, as comfortable to sit in as it is beautiful to look at. Lamini is upholstered in sheepskin, fabric, or leather and is available in oak and beech with a variety of finishes. The small easy chair also comes with a matching footstool, of course, giving little feet a place to rest.



Product Details

Article number	23301
Description	Kids easy chair in molded and laminated veneer.
Year of launch	2006
Country of origin	Sweden
Warranty	5 years
Monterad	Nej
Certifiering	Nej

Standard options

Upholstery

Sheep skin;
Off white, Black, Moonlight, Charcoal, Espresso, Sahara



Fabric

Leather

Wooden base

Oak; Natural lacquer, White pigmented lacquer, Oil



Beech; Natural lacquer, Black lazur finish,
White lazur finish, Walnut stained



Technical Information

Material och konstruktion

Leg stand / Lamini kids easy chair features two leg stands constructed from molded and laminated veneer. Each leg stand consists of three components; leg, support angle, armrest plate, wich are seamlessly joined. The leg stands are attached to the seat with two screws each.

Seat / Consists of an outer and inner frame made of laminated and molded veneer. Solid wood cross braces provide stability and facilitate attachment of the leg assemblies. For enhanced comfort, the front edge of the seat and the upper edge of the backrest are fitted with bonded foam beneath the upholstery.

Sheepskin Upholstery / The Lamini easy chair with sheepskin upholstery features a load-bearing linen fabric stretched over the inner frame. The sheepskin is bonded to the fabric and stapled to the frame. Finally, an outer frame is secured with screws on both sides of the inner frame, enclosing and securing the sheepskin.

Fabric and Leather Upholstery / The frame is fitted with a load-bearing linen fabric. Polyether foam padding is applied to the seat and backrest. The fabric or leather upholstery is stapled to the frame. The upholstery is finished with piping. A fabric- or leather-upholstered back panel is available as an optional feature.

Fabric req.	0,6 lpm
Leather req.	1,3 ft ^{2}
Weight	approx. 7 kg

Maintenance
All components are replaceable
Covered by the Swedese Repair refurbishment service
Care instructions available on Swedese's website

Downloads
2D and 3D files available for download from the product page on Swedese's website.

Dimensions (cm)
All dimensions are approximate and subject to minor variations.

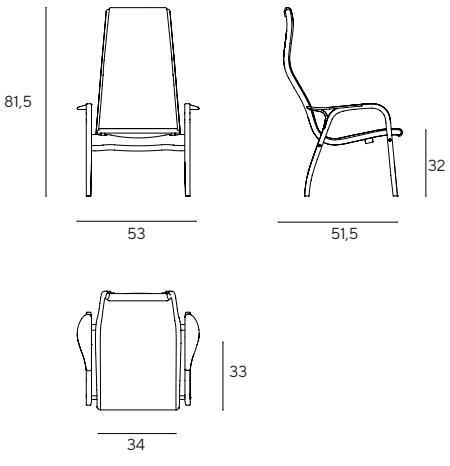

Lamini Kids Foot stool

Design Yngve Ekström

Lamini is the children's version of Swedese's design classic Lamino. Just like Lamino, Lamini is made from molded, laminated veneer. The easy chair and footstool are handcrafted with great skill in our factories in Småland, Sweden. The result is a high-quality piece of furniture for our youngest customers, as comfortable to sit on as it is beautiful to look at. The Lamini footstool is available upholstered in sheepskin, fabric, or leather, in oak or beech with a variety of finishes.



Product Details

Article number	23310
Description	Foot stool for kids
Year of launch	2006
Country of origin	Sweden
Warranty	5 years
Assembeled	No
Certification	No

Standard options

Upholstery

Sheepskin; Off white, Black, Moonlight, Charcoal, Espresso, Sahara



Fabric

Leather

Wooden base

Oak; Natural lacquer, White pigmented lacquer, Oil



Beech; Natural lacquer, Black lazur finish, White lazur finish, Walnut stained



Technical Information

Materials and construction

Leg stand / Lamini kids stool features two leg stands constructed from molded and laminated veneer. The leg stands are attached to the seat with two screws each.

Seat / Seat shell in molded plywood. Polyether foam is glued to the seat shell. Solid wood cross braces are mounted underneath the seat.

Sheepskin Uphosltery / Sheepskin is glued to the polyether foam and stapled in place.

Fabric, Leather and Saddle Leather Upholstery /
Upholstery is stretched over the frame and stapled in place. Finished with welt cord.

Fabric req.	0,6 lpm
Leather req.	1,3 ft ²
Weight	approx. 3 kg

Maintenance
All components are replaceable
Covered by the Swedese Repair refurbishment service
Care instructions available on Swedese´s website

Downloads
2D and 3D files available for download from the product page on Swedese´s website.

Dimensions (cm)
All dimensions are approximate and subject to minor variations.

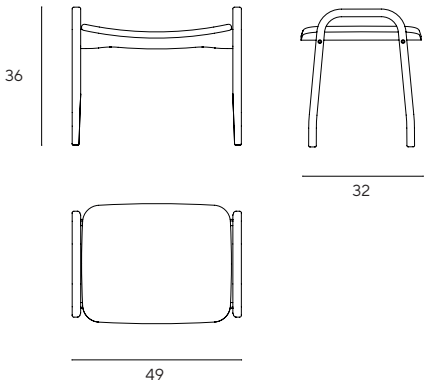

Swedese Möbler AB
P.O Box 156
SE-567 23 Vaggeryd
Sweden

info@swedese.se
Tel +4639379700

SWEDESE